MobileDemand
Achieve More

Forge X11

GLACIER COMPUTER
A Logic Instrument Company

Android

Connected Without Compromise.
Built for the Enterprise.

Meet the Forge X11 - Fast, reliable Wi-Fi 6E with optional 5G connectivity keeps your workforce productive wherever the job takes them.

Whether your team is connected inside the warehouse or miles into the field, the Forge X11 is built to keep business moving. Equipped with ultra-fast Wi-Fi 6E and available 5G connectivity, it delivers secure, high-speed access to the applications, data, and communications your workforce depends on - without being tied to a desk. Combined with MobileDemand's rugged xCase, patented Snap Mount System, and enterprise deployment solutions, the Forge X11 is ready to perform wherever work happens.

MILITARY STD-810H
DROP TEST
PASSED!

PROTECTED TO PERFORM

Built for environments where ordinary tablets don't last, the Forge X11 is protected by MobileDemand's rugged xCase featuring impact-resistant materials, reinforced corner protection, and an ergonomic design that stands up to the demands of daily industrial use. It's protection your workforce can rely on - shift after shift.

SEE MORE. DO MORE.

A vibrant 10.95-inch 2.5K display gives operators more room to view applications, drawings, inventory, and workflows without sacrificing mobility. Powered by the Qualcomm® Snapdragon® 7s Gen 3 platform and Android™ 16, the Forge X11 delivers the speed and responsiveness businesses need throughout the workday.

READY TO MOUNT. READY TO MOVE.

From forklifts and utility vehicles to workstations and mobile carts, the Forge X11 is designed to go wherever work happens. The included Snap Plate integrates with MobileDemand's patented Snap Mount System, making installation quick while allowing the tablet to move effortlessly between locations as workflows change.

BUILT FOR THE WAY YOU WORK

The Forge X11 is more than a rugged tablet - it's a complete mobile platform. An integrated briefcase handle, rear hand strap, and expandable accessory ecosystem allow each deployment to be tailored for the task at hand, while future-ready support for barcode scanning, payment solutions, and additional peripherals ensures your investment grows with your business.

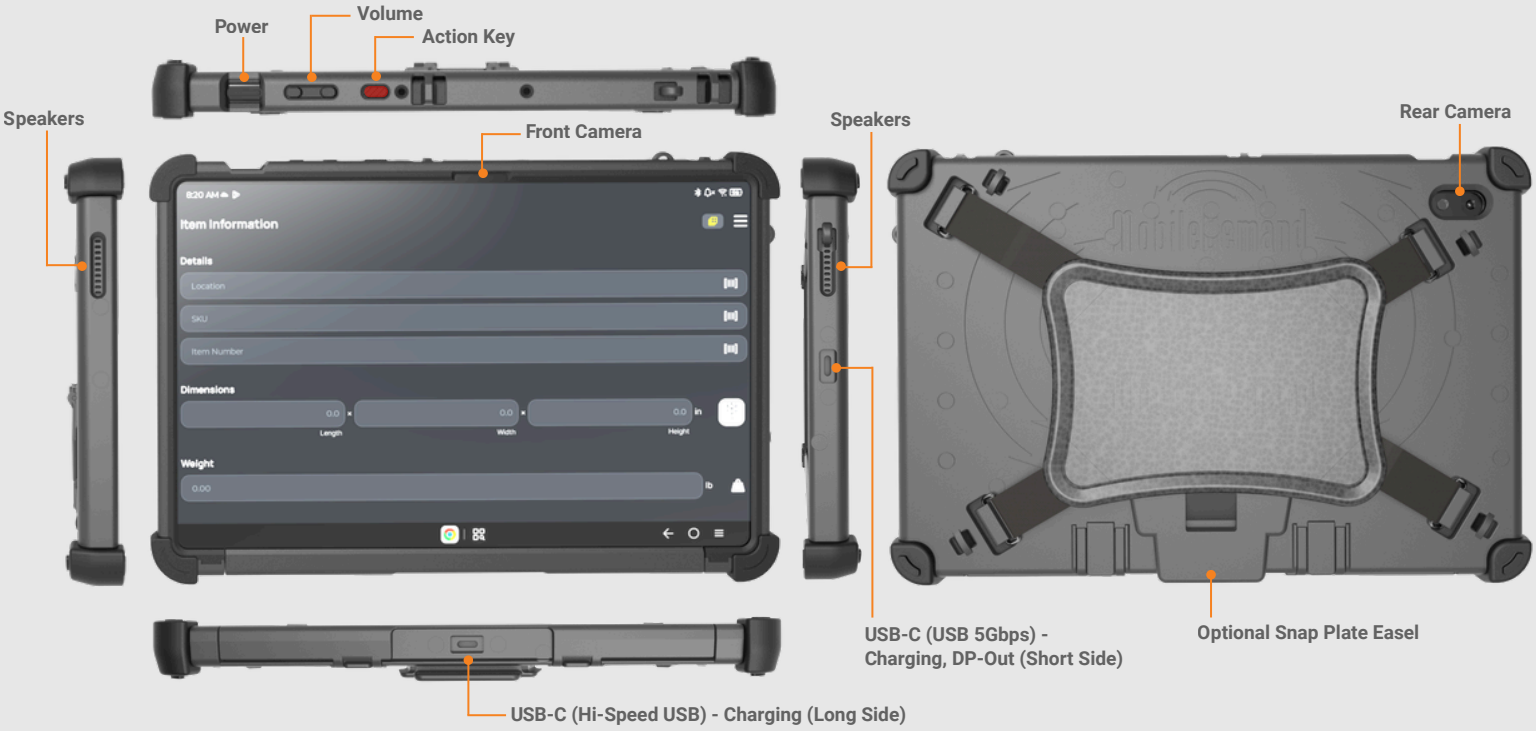

FEATURES

- Android 16
- Rugged Lightweight Form Factor
- Vehicle Mountable
- Qualcomm® Snapdragon® 7s Gen 3
- WiFi 6E & Bluetooth® 5.4
- Optional 5G Model

Included Accessories

Snap Mount
Briefcase Handle
Back Hand Strap

Optional Features / Accessories

3D Camera
Barcode Scanner
MSR
Payment Module
NFC
Snap Plate Easel

Warranty

The Forge X11 comes with a 1-year warranty that covers hardware failure when the tablet has been used as designed. In addition, MobileDemand offers a **2-Year xProtect Extended Coverage**.

Forge X11 Specifications

O/S	Android 16
DIMENSIONS*	12.12 in (W) x 6.64 in (H) x 0.39 in (D) 257.10 mm (W) x 168.65 mm (H) x 9.93 mm (D)
WEIGHT*	Starting at 1.43 lb (0.65 kg)
DISPLAY	10.95 in 2.5K PureSight - 2560 (W) x 1600 (H) 16:10, 90Hz, 600 - 800 NITS
TOUCH	10-Point Touch Support Capactive-Type Multi-Touch
CPU	Qualcomm® Snapdragon® 7s Gen 3
MEMORY	8 GB LPDDR5
STORAGE	Internal - 256GB UFS 3.1 Pro External - MicroSD (Up to 2TB)
CAMERA	8 M Color FF Front 13 M Color AF Rear
RUGGEDIZED	
Drop Test	MIL-STD-810H (4 feet)
Sealing	IP68 Rating
Screen Protector	Corning® Gorilla® Glass
Operating Temp	0°C - 50°C (32°F - 122°F)
Storage Temp	-20°C - 60°C (-4°F - 140°F)
Operating Humidity	0% - 85% non-condensing

I/O PORTS	
USB-C (Hi-Speed USB) - Charging (Long Side)	
USB-C (USB 5Gbps) - Charging, DP-Out (Short Side)	
MicroSD Card Slot (Up to 2TB)	
AUDIO	Microphone (x2) Speakers (x2)
BUTTONS	Power; Volume +/-; Action Key
SENSORS	Accelerometer + G Sensor
	Ambient Light Sensor
	Hall Sensor
	P Sensor
	SAR Sensor
	e-Compass
BATTERY SYSTEM	10,200 mAh, Hours TBD[1]
WIRELESS/NETWORK	
WLAN	Wi-Fi 6E
WWAN	Optional 5G Sub-6 GHz Model
Bluetooth®	5.4
AGENCY APPR	FCC-IC
ENTERPRISE	Supports standard Android Enterprise enrollment and compatibility with leading Unified Endpoint Management (UEM) / Enterprise Mobility Management (EMM) platforms.

*Dimensions and weight are without xCase.
[1]Hours TBD. Battery life varies significantly depending on settings, app usage, and other factors.
Information subject to change.

GLACIER COMPUTER
A Logic Instrument Company
CALL: 866.724.6257
EMAIL: SALES@GLACIERCOMPUTER.COM
VISIT: GLACIERCOMPUTER.COM

©2026 MobileDemand, LC | All trademarks are property of their respective owners.